Operating Instruction and Parts Manual for

KPC60H/KPC60L
PLATE COMPACTOR

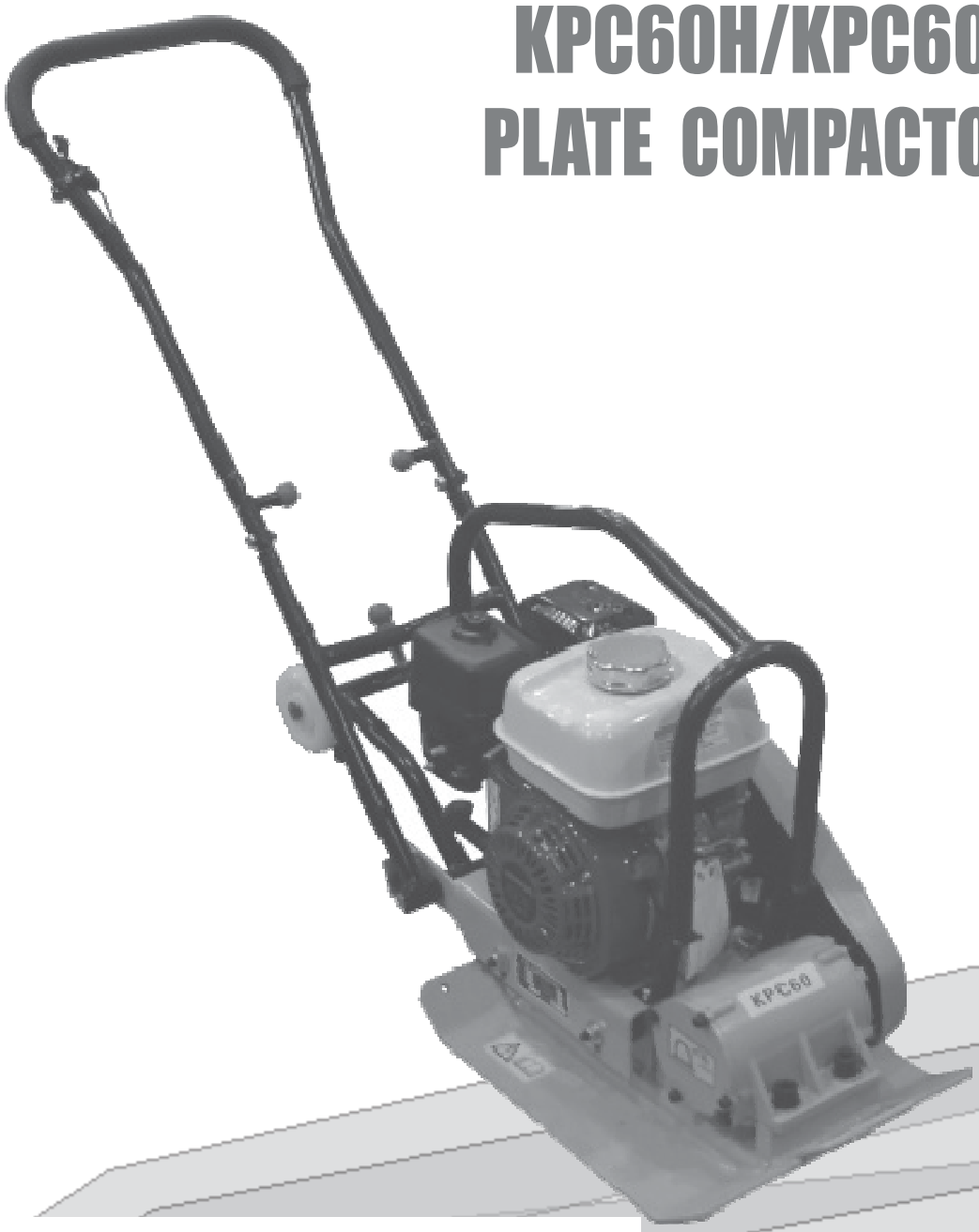

ASPHALT KINGDOM

www.asphaltkingdom.com
1-866-399-5562

WARNING: To reduce the risk of injury, all operators and maintenance personnel must read and understand these instructions, before operating, changing accessories, or performing maintenance on our equipment. All possible situations can not be covered in these instructions. Care must be exercised by everyone using, maintaining or working near this equipment.

INTRODUCTION

Thank you for your selection for our equipment.
We have taken care in the design, manufacture and testing of this product. It is covered by a six month warranty.
Should service or spare parts be required, prompt and efficient service is available from our company or our agent.

GENERAL SAFETY INSTRUCTION FOR THE OPERATION OF POWER EQUIPMENT

The goal of our company is to produce power equipment that helps the operator work safety and efficiently. The most important safety device for this or any tool is the operator. Care and good judgment are the best protection against injury. All possible hazards can not be covered here, but we have tried to highlight some of of the important items, individuals should look for and obey caution. Warning and Danger signs placed on equipment, and displayed in the workplace. Operators should read and follow safety instructions packed with each product. Learn how each machine works. Even if you have previously used similar machines, carefully check out each machine before you use it. Get the “feel” of it and know its capabilities. Limitations, potential hazards, how it operates, and how it stops.

APPLICATIONS

Trench compaction o Earth works o Road maintenance o Landscaping o Brickpaving o Driveway toppings

FUNCTIONS AND CONTROLS

The motor is controlled by an ON/OFF switch or push button which is mounted on the motor below the fuel tank. Tension of the drive belt is adjustable. Loosen the four nuts on the bolts which secure the motor to the baseplate. Adjust the set screws which bear against the motor crankcase to achieve the required belt tension. Ensure that the four nuts and the set screw locknuts are tightened after adjustment.

ACCESSORIES

Transportation Trolley-facilitates handling, Hooks into the base plate. Fitted with 200mm rubber tyres.

HAZARDS AND RISKS

NEVER allow any person to operate the machine without adequate instruction.
ENSURE all operators read, understand and follow the operating instructions.
SERIOUS INJURY could result from improper or careless use of this machine.
Plates compactors are heavy units and should be positioned by two people of appropriate strength.
Using the lifting handles provided on the machine. along with correct lifting techniques.

MECHANICAL HAZARDS!

DO NOT operate the machine unless all protective guards are in place.
KEEP handles and feet clear of rotating and moving parts as they will cause injury if contacted.
ENSURE that the motor operation switch is in the OFF position and the spark plug ignition lead is disconnected before removing the guards or making adjustments.
ENSURE both the machine and the operator are stable by setting up on level terrain and the machine will not tip over. slide off all while in operation or unattended.
DO NOT leave the machine in operation while it is unattended.
ENSURE that the walls of a trench are stable and will not collapse due to the action of the vibration, prior to commencing compaction.
EUSURE that the area to be compacted does not contain any “live” electrical cables, gas, water or communication services which many be damaged by the action of vibration.
EXERCISE CARE when operating unit. Exposure to vibration or repetitive work actions may be harmful to hands and arms.
NEVER stand on the unit while it is operating.
DO NOT increase the governed no-load motor speed above 3,500 r/min. Any increase may result in personal injury and damage to the machine.
BE CAREFUL not to come in contact with the muffler, when the engine is hot, since it can cause severe burns.
ENSURE that the repairs to the motor and machine are carried out by COMPETENT personnel

FIRE & EXPLOSION HAZARDS!

PETROL is extremely flammable and explosive under certain conditions;
ENSURE that the petrol is only stored in an approved storage container.
DO NOT refuel the motor while it is in operation or hot.
DO NOT refuel the motor in the vicinity of sparks, a naked flame or a person smoking.
DO NOT over fill the fuel tank and avoid spilling petrol when refueling .Spilled petrol or petrol vapor may ignite. If spillage occurs, ensure that the area is dry before starting the motor,
ENSURE that the fuel tank cap is securely fitted after refueling.

CHEMICAL HAZARDS!

DO NOT operate or refuel a petrol or diesel motor in a confined area without adequate ventilation.
CARBON MONOXIDE exhaust gases from internal combustion motor driven units can cause death in confined spaces.

NOISE HAZARDS!

EXCESSIVE NOISE can lead to temporary or permanent loss of hearing.
WEAR an approved hearing protection device to limit noise exposure. As required by Occupational Health and Safety regulation.

PROTECTIVE CLOTHING

ALWAYS wear approved hearing protection when working in a confined work space. Protective goggles and a dust mask should be worn when working in a dusty environment. Protective clothing and footwear may also be desirable when working with hot mix bitumen.

ADDITIONAL HAZARDS!

Slip/Trip/Fall is a major cause of serious injury or death. Be aware of uneven or slippery work surfaces.
Exercise care when working in the vicinity of unprotected holes or exca

OPERATION

Pre start-up inspection

The following Pre-start-up inspection must be performed before the start of each work session or after every four hours of use. Which ever is first. If any fault is discovered, the compactor must not be used until the fault is rectified.

1. Thoroughly inspect the compactor for signs of damage. Check components are present and secure. Pay special attention to the belt drive safety guard fitted between the engine and the vibrator unit.
2. Check the engine oil level and top up as necessary
3. Check the engine fuel level and top up as necessary
4. Check for fuel and oil leaks

Start and stop Procedure for Petrol Engine

1. Open the fuel tap by moving the fuel ON/OFF lever fully to the right.
2. If starting the engine from cold, set the choke ON by moving the choke lever fully to the left. If restarting a warm engine, he choke is usually not required. However, if the engine has cooled to a degree, partial choke may be required.
3. Turn the engine ON/OFF switch clockwise to the "1" position.
4. Set the throttle to the idle position by moving the throttle lever fully to the right. Do not start the engine on full throttle, As the compactor will vibrate as soon as the engine starts.
5. Taking a firm hold o the control handle with one hand, grasp the recoil starter handle with the other., pull the recoil starter until engine resistance is felt. Then let starter return.
6. Taking care not to pull starter's cope fully out. pull the starter handle briskly.
7. Repeat until the engine fires.
8. Once the engine fires gradually, set the choke lever to the OFF position by moving It to the right.
9. If the engine fails to fire after several attempts, follow the trouble-shooting guide on page 5.
10 .To stop the engine, set the throttle to idle and turn the engine ON/OFF switch anticlockwise o the "0" position.
11. Turn the fuel off

The machine is best suited to the compaction of bituminous and granular materials e.g. granular soils such as silt and clay are best compacted using the impact force produced by a vibrating rammer.
Where possible the site should be graded and leveled before commencing compaction.
For more information of starting and correct operating procedures o the motor, refer to the motor operation manual supplied with the unit.
Increase the motor sped to the maximum setting using the hand throttle lever, before commencing compacting.
The machine should be controlled by grasping the handle with supplied with the unit.
Increase the motor sped to the maximum setting using the hand throttle lever, before commencing compacting.
The machine should be controlled by grasping the handle with both hands and applying restraint to control the forward motion.
Steer the machine by moving the handle sideways to the right or left;
ALWAYS maintain good footing so that you do not slip and loose control when starting or operating the machine;
Inspection the water hose and its connections to ensure that they do not leak.

CARE AND PREVENTIVE MAINTENANCE

Check the oil level in the motor crankcase daily.
Check the vibrator oil level weekly.
Inspect the rubber anti vibration mounts for wear or deterioration.
Inspection the water hose and its connections to ensure that they do not leak.
Clean the underside of the plate regularly to prevent a build up of material.
Use unleaded grade petrol and ensure that the fuel is free from contamination.
The vibratory motion provides a self propelling action.
Position the handle at the opposite end of the machine to the vibrator.
Start the motor using the recoil starter.(If the motor is fitted with an on/off switch this must first be turned to ON before starting.)
Correct moisture content in soil is vital to proper compaction.
Water acts as a lubricant to help slide soil particles together.
Too little moisture means inadequate compaction; too much moisture leaves water-filled voids that weaken the soil's load bearing ability.
Compaction of dry materials will be facilitated by moistening with a water hose fitted with a sprinkler.
Excessive watering or water content will cause the machine to stall.
The optional water tank kit is recommended when the machine is used on bituminous surfaces as the water fulm prevents A build up of material on the underside of the plate.

CAUTION

Inspection and other services should always be carried out on hard and level ground with the engine shut down.
Inspection and maintenance Service Tables
To make sure your plate compactor is always in good working condition before using. carry out the maintenance inspection in accordance with Tables 1 through 3.

TABLE 1. MACHINE INSPECTION

ITEM	Hours of Operation
(Starting Check)	Every8 hours (every day)
Loosened of lost screws	Every8 hours (every day)
Damage of any part	Every8 hours (every day)
Function of controlling system part	Every8 hours (every day)
Vibrator oil check	Every 100 hours
Vibrator oil replacement	Every 100 hours
V-belt (Clutch)	Check Every 100 hours

TABLE 2.ENGINE CHECK

(For details, see separate engine manual)	
ITEM	**Hours of Operation**
Leakage of oil fuel	Every8 hours (every day)
Tightness of fastening Threads	Every8 hours (every day)
Engine oil check and replenishment	Every8 hours (every day) (Replenish to specified Max. Level)
Engine oil replenishment	At first 20 hours, then every 100 hours
Air cleaner cleaning	Every 50 hours

CAUTION

These inspection intervals are for operation under normal conditions. Adjust your inspection intervals based on the number hours plate compactor is in use, and particular working conditions.

CAUTION

Fuel piping and connections should be replaced every 2 years.

Daily Service

Check for leakage of fuel or oil.

Remove soil and clean the bottom of compaction plate.

Check for loose screws including tightness. See Table 3 below (Tightening torque), for retightening.

TABLE 3

TIGHTENING TORQUE (in.kg/cm) Diameter

Material	6mm	8mm	10mm	12mm	14mm	16mm
4T	70	150	300	500	750	1100
6-8T	100	250	500	800	1300	2000
11T	150	400	800	1200	2000	2900

Changing Vibrator Oil

When changing the vibrator oil, remove the drain plug located at the bottom-right of the vibrator, and simply tip the compactor to drain the oil. Note that the oil will drain more easily while it is hot. Replace the oil with 200ML of 10W-30 motor oil.

Air Filter

1.The air filter element should be cheaned because a clogged air cleaner can cause poor engine starting, lack of power and shorten engine life substantially.

2.To clean or replace air filter loosen the wing nut on the air filter housing (Figure 1), remove the cover and take out air filter cartridge. If only cheaning of the air filter is desired blow through the air filter cartridge from the inside, moving a jet of dry compressed air up and down until all dust is removed.

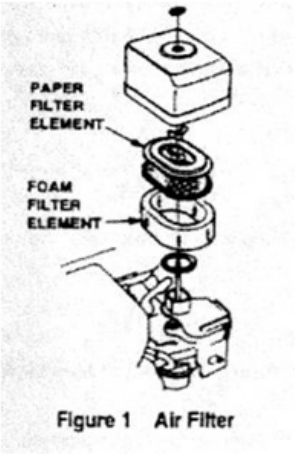

Figure 1 Air Filter

CAUTION:

NEVER attempt to check the V-belt with the engine running. Severe injury can occur if your hand gets caught between the V-belt and the clutch. Always use safety gloves.

Checking and Replacing the V-belt and Clutch

After 200 hours of operation, remove the upper belt cover to check the V-belt tension (Figure 2).Tension is proper if the belt bends about 10mm when depressed strongly with finger between shafts. Loose or worn V-belts reduce power transmission efficiency, cause weak compaction and reduces the life ofthe belt itself.

CAUTION:

Whenever the compactor's vibration becomes weak or lost during normal operation regardless of operation hours, check the V-belt and clutch immediately.

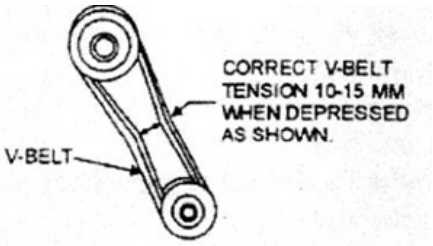

Figure 2. V-Belt Tension

Replacing the V-belt

Remove the upper and lower belt covers, Engage an offset wrench (13mm) or the like to vibrator pulley (Lower)fastening bolt. Engage waste cloth or the like at midway of V-belt on the left side and while pulling it back strongly, rotate the offset wrench clockwise so that the V-belt will come off.

Reinstalling the V-belt

Engage V-belt to the lower vibrator pulley and push the V-belt to the left side of upper clutch and, in the same manner as in removal, rotate offset wrench clockwise so that the V-belt goes back on.

Checking Clutch

Check the clutch simultaneously with V-belt checking. With belt removed, check outer drum of the clutch for seizure and "V' groove for wear or damage with your eyes. Clean the "V" groove as necessary. Wear of lining or shoe should be checked with running check. If the shoe is worn, power transmission becomes deficient and slipping will result.

KPC60 PLATE COMPACTOR

Model	KPC160H	KPC60R	KPC60L
Engine	Air-cooled,single cylinder,4-stroke		
Engine Type	Petrol,Honda GX160	Petrol,Robin EY20	Petrol,Loncin G160F
Power (hp)	5.5(4.0kw)	5.0(3.7kw)	5.5(4.0kw)
Weight (kg)		62(136 lbs)	
Centrifugal force	10.5		
Frequency (vpm)	5500(92Hz)		
Compaction depth (cm)	20(8in)		
Travel speed (cm/s)	34(13in/s)		
Efficiency (m2/hr)	423(4557 ft2/hr)		
Plate Size (cm)	50×35(21×20in)		
Dimension (cm)	108×35×85(43×14×33in)		
Optional	with water tank, additional weight 8 kgs		

Drive Belt: 1×"B" section vee belt

Acoustic Noise (According to 2000/14/EC)

Model No.	KPC60
Measured Sound Power Level	101.5dB
Guaranteed sound power level	104.50dB
Uncetainly	3dB

Hand-Arm-Vibration (as per ISO8662, part 1, m/s2):4-9

TRANSPORTATION

1.Always shut off engine when transporting machine.
2.Make sure lifting device has enough capacity to hold machine (see identification plate on machine for weight).
3.Use central lifting point (a) (c) (as optional) when lifting machine.
4.Trolley wheel (b) as optional is used for short distance transportation.

TROUBLESHOOTING		
SYMPTOM	**POSSIBLE CAUSES**	**SOLUTION**
Travel Speed too low, and vibration is weak	Engine speed too low?	Set engine speed to correct RPM.
	Clutch slips?	Check or replace clutch
	V- belt slips?	Adjust or replace V-belt
	Excessive oil in vibration?	Drain excess oil and fill to proper lever
	Malfunction in vibrator housing?	Check eccentric, gears and counter weights
	Bearing Failure?	Replace Bearing
	Insufficient engine output?	Check engine, compression, etc.

ENGINE TROUBLESHOOTING

SYMPTOM	POSSIBLE CAUSES	SOLUTION
Difficult to start, "Fuel is available, but no SPARK at spark plug".	Spark plugs bridging?	Check gap, insulation or replace spark plug.
	Carbon deposit on spark plug?	Clean or replace spark plug.
	Short circuit due to deficient spark plug insulation?	Check spark plug insulation, replace if worn
	Improper spark plug gap?	Set to proper gap
Difficult to start, "Fuel is available, but no SPARK at spark plug".	ON/OFF switch is shorted?	Check switch wiring, replace switch
	Ignition coil detective?	Replace ignition coil
	Improper spark gap, point's dirty?	Set correct spark gap and clean points
	Condenser insulation worm of short circuiting?	Replace condenser
	Spark plug wire broken or short circuiting?	Replace defective spark plug wiring
Difficult to start, "Fuel is available, spark is present and compression is normal".	Wrong fuel type?	Flush fuel system, and replace with correct type of fuel
	Water or dust in fuel system?	Flush fuel system
	Air cleaner dirty?	Clean or replace air cleaner
Difficult to start, "Fuel is available, spark is present and compression is low".	Suction/exhaust value stuck or protruded?	Re-seat valves
	Piston ring and/or cylinder worn?	Replace piston rings and or piston
	Cylinder head and/or spark plug not tightened properly?	Torque cylinder head bolts and spark plug
No fuel present at arburetor	Fuel not available in fuel tank?	Fill with correct type of fuel
	Fuel cock does not open properly?	Apply lubricant to loosen fuel cock level, replace if necessary
	Fuel filter clogged?	Replace fuel filter
	Fuel tank cap breather hole clogged?	Clean or replace fuel tank cap
	Air in fuel line?	Bleed fuel fine
"Weak in power" compression is proper and does not mistires	Air cleaner not clean?	Clean or replace cleaner
	Improper level in carburetor?	Check float adjustment, re-build carburetor
	Defective spark plug?	Clean or replace spark plug
"Weak in power" compression is proper but mistires	Water in fuel system?	Flush fuel system, and replace with correct type of fuel
	Dirty spark plug?	Clean or replace spark plug
	Ignition coil defective?	Replace ignition coil
Engine overheats	Spark plug heat value improper?	Replace with correct type of spark plug
	Correct type of fuel?	Replace with correct of fuel
	Cooling fins dirty?	Clean cooling fins
Rotational speed fluctuates.	Governor adjusted correctly?	Adjust governor
	Governor spring defective?	Replace governor spring
	Fuel flow restricted?	Check entire fuel system for leaks or clogs
Recoil starter malfunction	Recoil mechanism clogged with dust and dirt?	Clean recoil assembly with soap and water
	Spiral spring loose?	Replace spiral spring

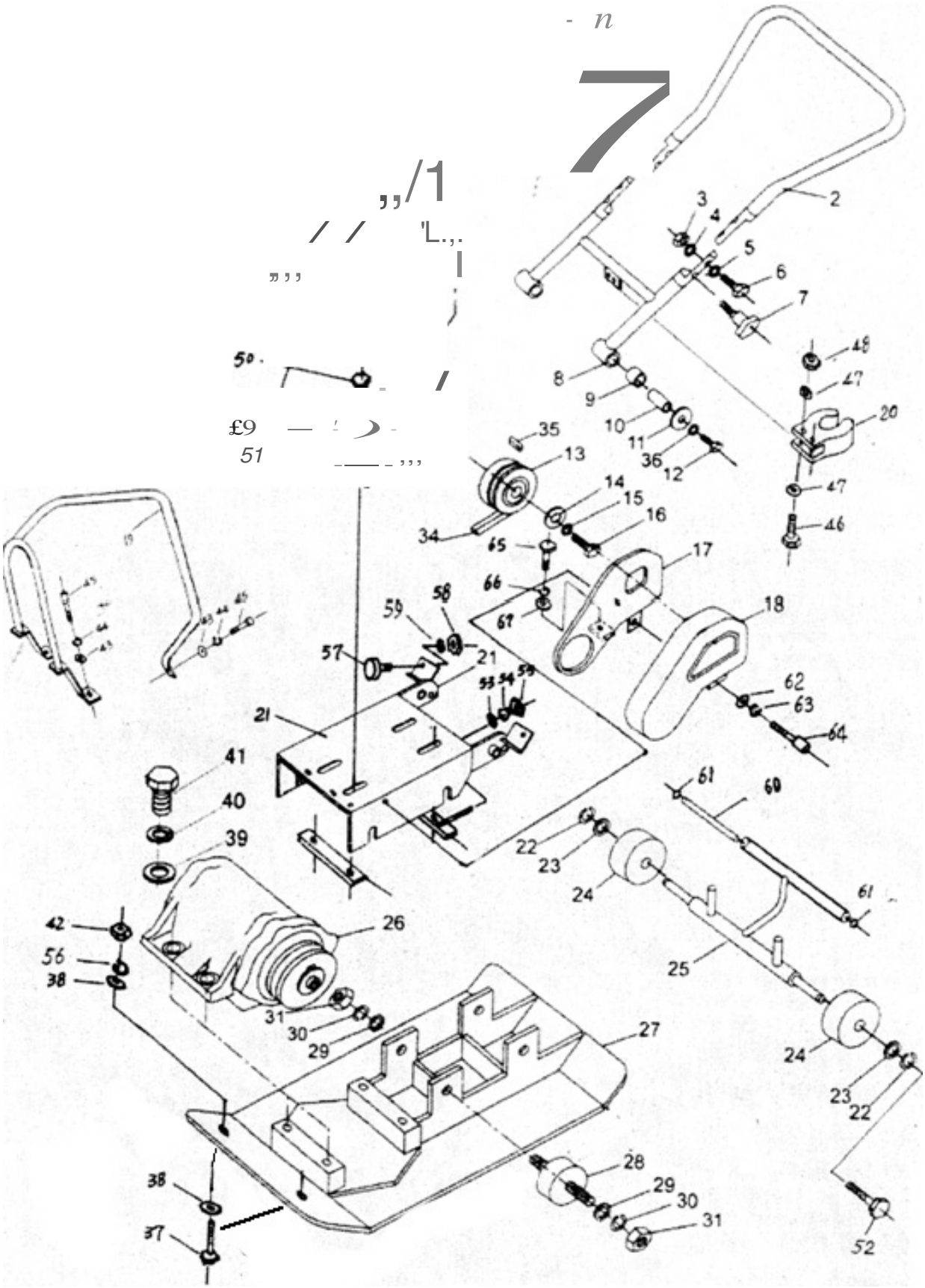
2
3
4
5
6
7
8
9
10
11
12
13
14
15
16
17
18
20
21
22
23
24
25
26
27
28
29
30
31
34
35
36
38
39
40
41
42
46
47
48
50
51
52
56
57
58
59
60
61
62
63
64
65
66
67

KPC60 PARTS LIST

ITEM NO.	PART NO.	DESCRIPTION	QUANTITY
1	600001	CHINESE PETROL ENGINE	1
2	600002	HANDLE-UPPER	1
3	600003	NUT M10-GB6184	2
4	600004	FLAT WASHER 10-GB97.1	2
5	600005	SPRING WASHER 10-GB93	2
6	600006	BOLT M10×35-GB5782	2
7	600007	KNOB	2
8	600008	HANDLE-DOWM	1
9	600009	RUBBER COLLAR	2
10	600010	STEEL COLLAR	2
11	600011	FLAT WASHER 12-GB97.1	2
12	600012	BOLT M12×55 GB5782	2
13	600013	ENGINE PULLEY ASSEMBLY	1
14	600014	FLAT WASHER 8-GB97.1	1
15	600015	SPRING WASHER 8-GB93	1
16	600016	BOLT M8×25-GB5782	1
17	600017	INSIDE BELT COVER	1
18	600018	BELT COVER	1
19	600019	GUARD HOOK	1
20	600020	RUBBER CLIP	1
21	600021	ENGINE MOUNTING PLATE	1
22	600022	SPRING WASHER 8-GB93	2
23	600023	FLAT WASHER 8-GB97.1	2
24	600024	WHEEL	2
25	600025	WHEEL STAND	1
26	600026	VIBRATOR ASSEMBLY	1
27	600027	BASE PLATE	1
28	600028	VIRATION ABSORBER	4
29	600029	FLAT WASHER 8-GB97.1	4
30	600030	SPRING WASHER 8-GB93	4
31	600031	NUT M10-GB6184	4
32	600032	THROTTLE CONTROL LEVER	1
33	600033	THROTTLE CONTROL WIRE	1
34	600034	V-BELT	1
35	600035	KEY	1
36	600036	SPRING WASHER 12-GB93	2
37	600037	BOLT M10×40-GB5780	2
38	600038	FLAT WASHER 10-GB97.1	4
39	600039	FLAT WASHER 16-GB95	4
40	600040	SPRING WASHER 16-GB93	4
41	600041	BOLT M16×40-GB5781	4
42	600042	NUT M10-GB6184	2
43	600043	FLAT WASHER 8-GB97.1	2
44	600044	SPRING WASHER 8-GB93	2
45	600045	BOLT M8×30-GB5781	2
46	600046	BOLT M6×30-GB5781	2
47	600047	FLAT WASHER 6-GB97.1	4
48	600048	NUT M6-GB6184	2
49	600049	SPRING WASHER 8-GB93	4
50	600050	BOLT M8×45-GB5782	4
51	600051	FLAT WASHER 6-GB97.1	4

ITEM NO.	PART NO.	DESCRIPTION	QUANTITY
51	600051	FLAT WASHER 6-GB97.1	4
52	600052	BOLT M8×25-GB5782	2
53	600053	FLAT WASHER 8-GB97.1	1
54	600054	SPRING WASHER 8-GB93	1
55	600055	NUT M8-GB6184	1
56	600056	SPRING WASHER 8-GB93	2
57	600057	VIBRATION DAMPER	2
58	600058	NUT M10-GB6184	2
59	600059	FLAT WASHER 8-GB97.1	2
60	600060	SPINDLE	1
61	600061	CIRCLIP EXT12-GB97.1	2
62	600062	FLAT WASHER 8-GB97.1	1
63	600063	SPRING WASHER 8-GB93	1
64	600064	BOLT M8×40-GB5782	1
65	600065	BOLT M8×20-GB5782	1
66	600066	SPRING WASHER 8-GB93	1
67	600067	FLAT WASHER 8-GB97.1	1
68	600068		
69	600069		
26	600026	VIBRATOR ASSEMBLY	1
71	600026-1	CASE COCER(L)	1
72	600026-2	OIL SEAL 35×48×10-GB9877	1
73	600026-3	O-RING 100-GB3452.1	1
74	600026-4	BOLT M8×25-GB5783	8
75	600026-5	SPRING WASHER 8-GB93	8
76	600026-6	FLAT WASHER 8-GB95	8
77	600026-7	PULLEY	1
78	600026-8	KEY C8-GB1096	1
79	600026-9	PULLEY WASHER	1
80	600026-10	BOLT M10×25-GB5783	1
81	600026-11	SPRING WASHER 10-GB93	1
82	600026-12	BEARING 6211-GB-276	2
83	600026-13	VIBRATING CASE	2
84	600026-14	PACKING CASE	1
85	600026-15	PLUG SCREW M14×1.5	1
86	600026-16	CASE COVER	1
87	600026-17	ECCENTRIC ROTATOR	1
88	600026-18		
13	600013	ENGINE MOUNTING PLATE	1
89	600013-1	CIRCLIP INT 62-GB893.1	1
90	600013-2	CIRCLIP EXT 30-GB894.1	1
91	6000213-3	DRUM	1
92	600013-4	BEARING 60206-GB276	1
93	600013-5	CENTRIFUGAL LUMP	3
94	600013-6	CLUTCH CENTRE	1
95	600013-7	CLUTCH SPRING	2

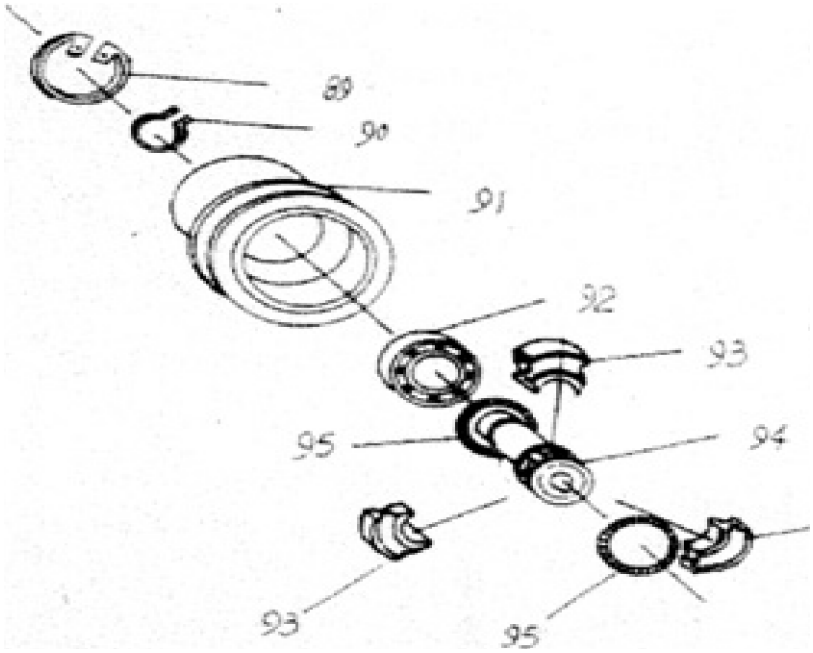
89
90
91
92
93
95
94
93
95

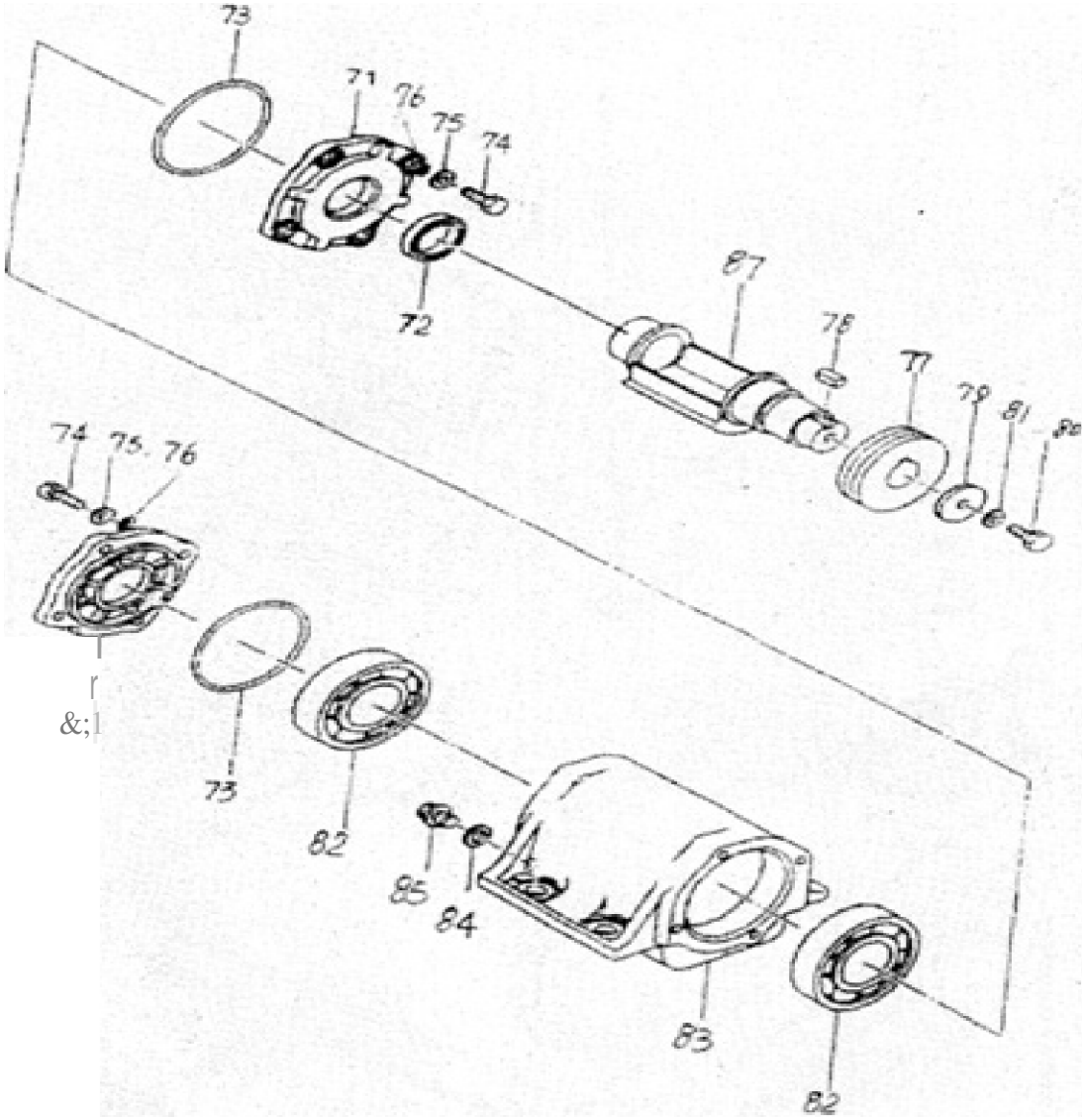
73
71
76
75
74
72
87
78
77
79
81
80
74
75. 76
73
82
85
84
83
82

WARRANTY

These products are covered by warranty for a period of six(6) months from the date of purchase against defects in material or workmanship provided that:

The product concerned has been operated and maintained in accordance with the operating instructions.

Has not been damaged by accident, misuse or abuse.

Has not been tampered with or repaired by any unauthorized person.

The owner is responsible for the cost of transpiration to and from the authorized repairer and the unit is at the owners risk while in transit to and from the repairer.

Impact damage is not covered under warranty. Clutches are not covered under any warranty. Engines are warranted by their manufacturer.

MAINTENANCE RECORDS

PREVENTATIVE MAINTENANCE AND ROUTINE SERVICE PLAN

This plate compactor has been assembled with care and will provide years of service. Preventative maintenance and routine service are essential to the long life of our plate compactor. After reading through this manual thoroughly, you will find that you can do some of the regular maintenance yourself. However, when in need of parts or major service, be sure to see your dealer. For your convenience we have provided this space to record relevant date about your plate compactor.

Invoice Number:		Type of Machine:	
Date Purchased:		Dealer Name:	
Serial Number:		Dealer Phone:	

REPLACEMENT PARTS USED					MAINTENANCE LOG	
ITEM NO.	DESCRIPTION	QUANTITY	COST	DATE	DATE	